DEWATERING PUMP

evak

Odvodňovací čerpadlo s chladícím pláštěm pro odčerpání kalů a pevných částic až do 38mm

EUBL

NÁHRADNÍ DÍLY

EUBL SERIES

LIGHTWEIGHT SUBMERSIBLE DEWATERING PUMP FOR SLUDGE / SOLIDS HANDLING

50 HZ

POWER: 1HP (0.75kW)

MAX HEAD: 12 meter

MAX FLOW: 380 lpm

50EUBL-5.10

PRODUCT NOMENCLATURE

Example: 50 EUBL-5.10 S

(1) (2) (3) (4)

1) Discharge Size

2) Model

3) Frenquency& HP

4) Phase (1Ø / 3Ø)

Parts and Material List

No.	Part	Material
1	Cable	H07RN-F / SJTOW / STOW
2	Handle	Steel + NBR
3	Motor Cover	ADC12
4	Upper Bearing Bracket	Steel
5	Motor Housing + Stator	ADC12 / Steel
6	Shaft with Rotor	AISI 410
7	Oil Chamber	ADC12
8	Mechanical Seal	CA/CE + SIC/SIC
10	Lip Seal	NBR
11	Impeller	Hytrel
12	Pump Casing	Hytrel
15-1	Upper Bearing	NTN/TPI
15-2	Lower Bearing	NTN/TPI
18-3	Wearing Plate	PA 66 Plastic
18-4	Volute Liner	NBR
30	Outer casing	AISI 304
36	Air Exhauste	NBR / AISI 304

TPI is a family brand of NTN group.

Features

- High abrasive resistance to liquids containing sand and gravel
- Free passage to 38mm in diameter
- Lightweight
- Pump body is highly resistant to impact
- Quick & easy replacement of wear components
- Air vent mechanism built-in allowing water to cool the motor when pumping
- Efficient circumferential cooling for continuos duty

Applications

- Construction and industrial sites
- Tunneling, public works, floods
- Emergency situation

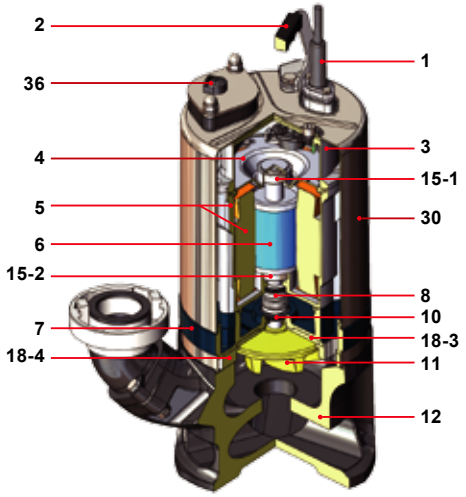

50EUBL-5.10

50EUBL-5.10

Steel coated with
thermoplastic polyester elastomer
DU PONT Hytrel®

Specifications

ITEM		DESCRIPTION
LIMITS OF USE	Liquid TEMP.	0~40°C
	Application	As sugested application page 1
TYPE	Frequency	50Hz
	Motor	2P (2850RPM) . Dry Motor
	Insulation	Class B
	Protection	IP 68
	Protector	Auto-Cut
	Bearing	Ball Type
	Mech. Seal	Dual. Mechanical Seal
	Impeller	Semi-Open Impeller
MATERIAL	Motor Cover	ADC12
	Motor Frame	ADC12
	SHAFT	AISI 410
	Mech. Seal	Upper : CA/CE ; Lower : SIC/SIC
	Pump Casing	Hytrel
	Impeller	Hytrel
	Cable	H07RN-F / SJTOW / STOW

Data Chart

MODEL	OUTPUT		DISCHARGE	PHASE	1Ø	3Ø	3Ø	3Ø	RATED		MAXIMUM		FREE PASSAGE	WEIGHT W/O CABLE	
	HP	kW	Inch	FULL LOAD AMPERAGE	230V	380V	400V	415V	m	lpm	m	lpm	mm	1Ø-kg	3Ø-kg
50EUBL-5.10	1	0.75	2"		5.8A	2A	2A	2A	8	170	12	380	38	14	14

Performance Curve

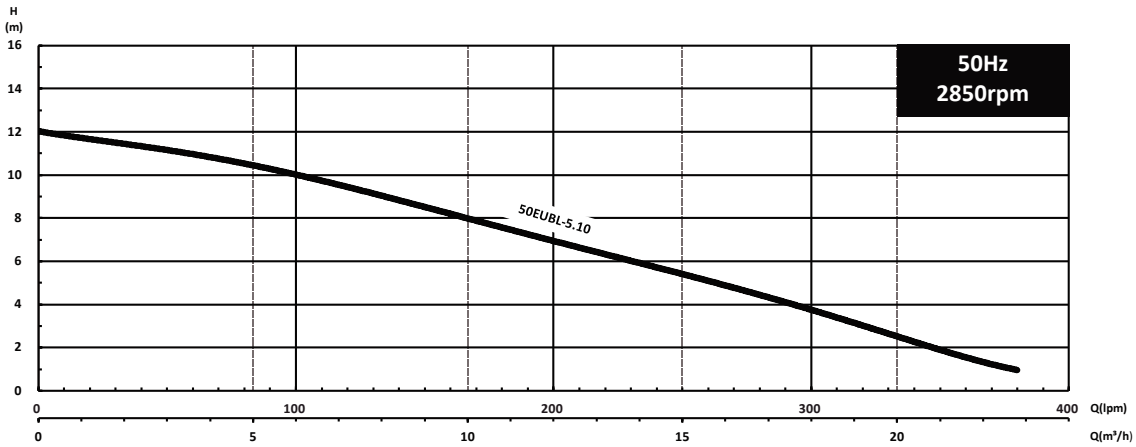

MODEL	OUTPUT		DISCHARGE	Q(lpm)	0	100	200	300	380	Q(m³/h)	0	5	10	20	22.8
	HP	kW	Inch												
50EUBL-5.10	1	0.75	2"	H(m)	12	10	6.9	3.7	1	H(m)	12.0	10.5	8	2.6	1

All technical information is subject to change without notice.

evak PUMP PARTNERS

50HZ
EUBL SERIES

ASSEMBLY VIEW

MODELS : 50EUBL-5.10 (1HP)

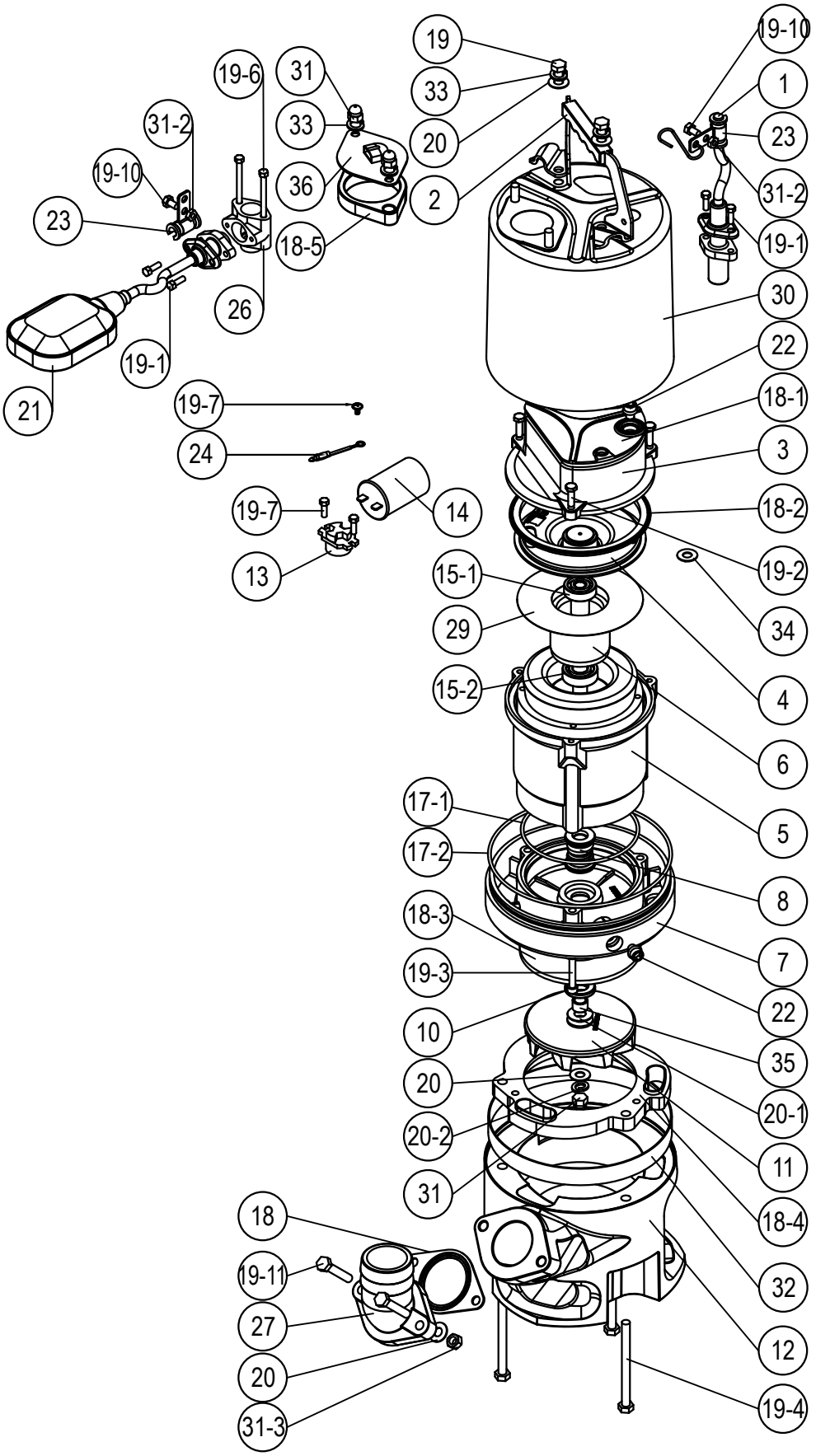

evak PUMP PARTNERS

50HZ EUBL SERIES

PARTS LIST

MODELS : 50EUBL-5.10 (1HP)

NO	Part	Material	Photo	NO	Part	Material	Photo
1	Cable	H07RN-F/ SJTOW/ STOW		13	Protector (1 Phase)	KLIXON	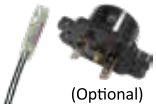 (Optional)
2	Handle	Steel+NBR		13	Protector (3 Phase)	KLIXON	
3	Motor Cover	ADC12		14	Capacitor	-	
4	Upper Bearing Bracket	Steel		15-1 15-2	Upper Bearing Lower Bearing	NTN/TPI	
5	Motor Housing +Stator	ADC12 + Steel		17-1 17-2	O-rings	NBR	
6	Shaft with Rotor	AISI 410		18-3	Wearing Plate	PA66 Plastic	
7	Oil Chamber	ADC12		18-4	Volute Liner	NBR	
8	Mechanical Seal	CA/CE + SIC/SIC		21	Float Switch (Optional)	-	
10	Lip Seal	NBR		27	Plastic Hosetail	PP	
11	Impeller	Hytrel		30	Outer Casing	AISI 304	
12	Pump Casing	Hytrel		36	Air Exhaust	NBR/ AISI 304	

NO	Part	Material	NO	Part	Material
18	Gasket	NBR	20-1	Washer	AISI 304
18-1	Gasket	NBR	20-2	Spring Washer	AISI 304
18-2	Gasket	NBR	22	Screw with O-ring	AISI 304/NBR
18-5	Flange Gasket	NBR	23	Cable Seat	Nylon 66/NBR
19	Screw	AISI 304	24	Earth Line	Steel
19-1	Screw	AISI 304	26	T adapter (Optional)	-
19-2	Screw	AISI 304	29	Insulating Paper	-
19-3	Screw	AISI 304	31	Nut	AISI 304
19-4	Screw	AISI 304	31-2	Nut	AISI 304
19-6	Screw	AISI 304	31-3	Nut	AISI 304
19-7	Screw	Steel	32	Volute Liner Outer Ring	AISI 304
19-10	Screw	AISI 304	33	Spring Washer	AISI 304
19-11	Screw	AISI 304	34	Corrugated Spring	Steel
20	Washer	AISI 304	35	Sleeve	AISI 304

TPI is a family brand of NTN group.